SHAPER CUTTER SC500X4.75X.5
MORTISING FOR TYPE 2 LARGE CASES

THIS SHAPER CUTTER PROVIDES A MEANS FOR MORTISING PANELS TO ACCEPT THE LARGE TYPE 2 LATCHES AND RECEIVERS. A STRAIGHT IN-AND-OUT CUT IS MADE.

CASE FLANGE RECESSES ARE NOT ACCOMPLISHED WITH THIS TOOL

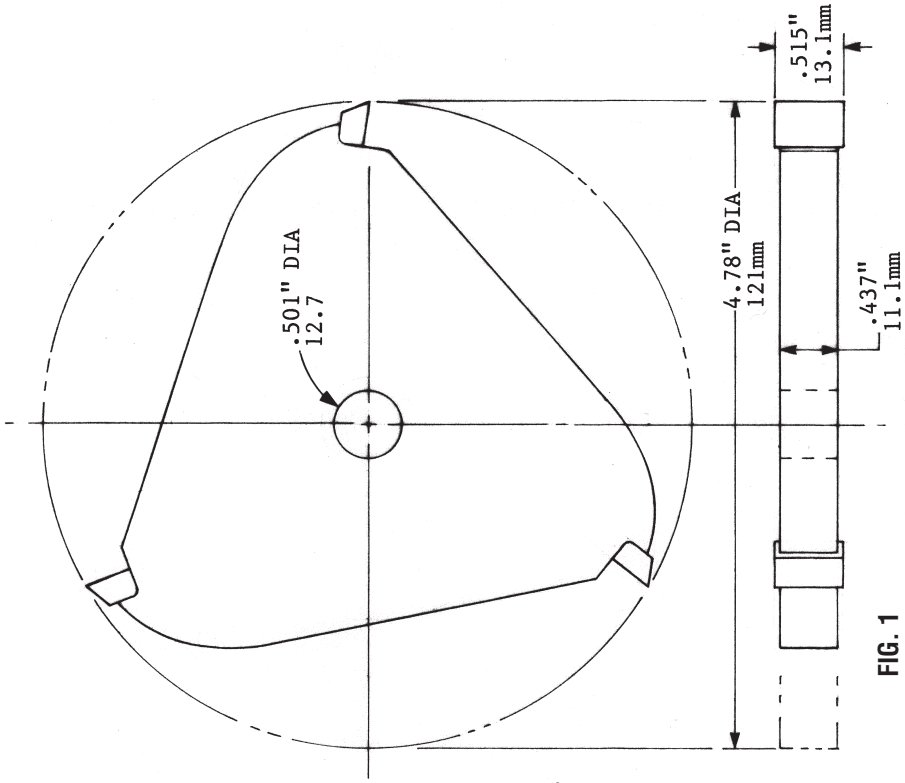

FIG. 1

SHAPER CUTTER DIMENSIONS
Shaper Cutter SC500x4.75x.5

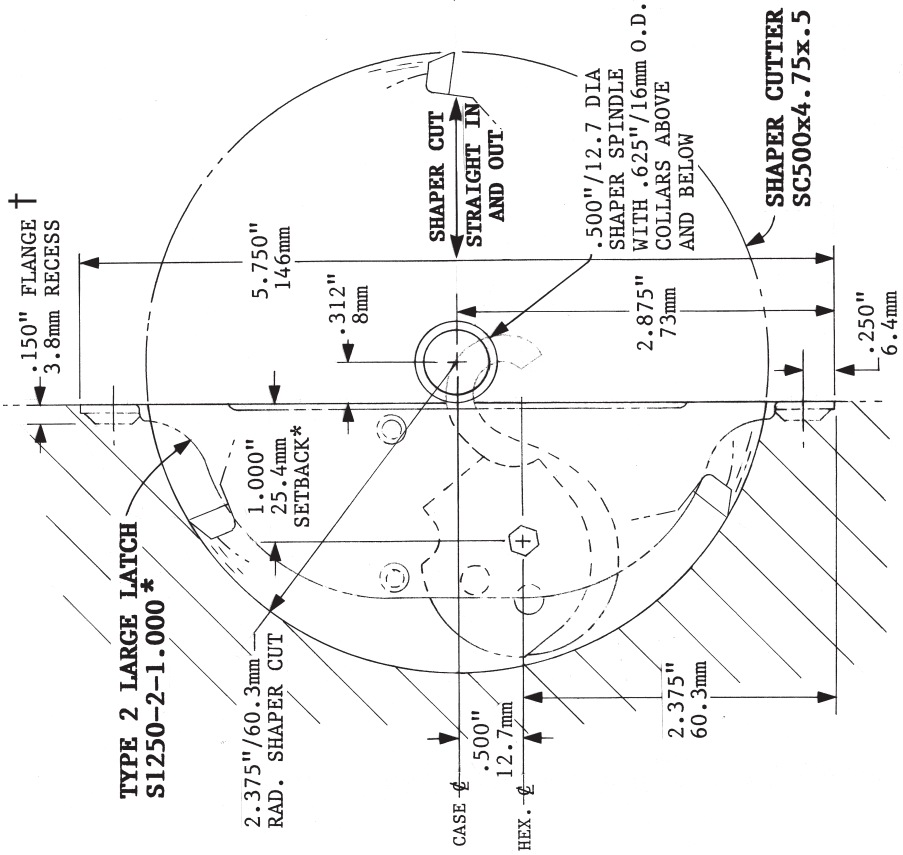

FIG. 2

SHOWN HERE IS THE SHAPER CUT IN A SOLID CORE PANEL AND THE MAXIMUM RECOMMENDED LATCH SETBACK

†Case flange recesses are not accomplished with this tool

LATCH: **S1250-2-1.000**
SHAPER CUTTER: **SC500x4.75x.5**

FOR SHAPER CUT MORTISING TYPE 2S SMALL CASES, SEE TDS 5-1A1