RATCHET WRENCH SET RW7/32x5

This Set Consists of a Double-Ended Offset Ratchet Wrench and Five (5) Various Length 7/32"/5.5mm Hex Bits in a Plastic Case

Fig. 1 Ratchet Wrench Set **RW7/32x5**

7/32"/5.5mm Hex Bit Lengths (§)

1.181"/30mm
1.968"/50mm
3.150"/80mm
5.906"/150mm
8.858"/225mm

Unbeatable For Working In Tight Corners!

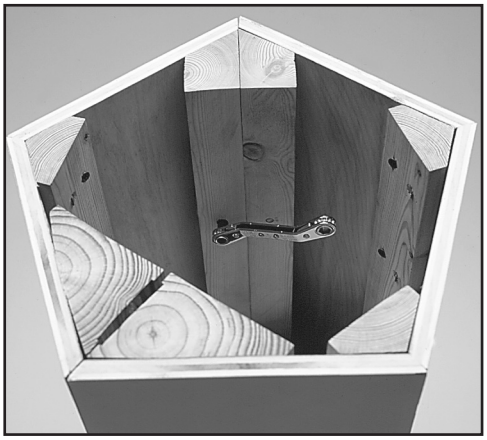

Fig. 2 The Norse Wrench ready to work in a pentagonal KD enclosure.

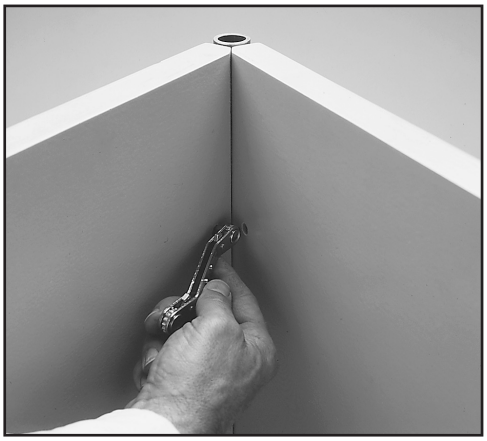

Fig. 3 The Ratchet Wrench working in a 60° corner of a KD kiosk.

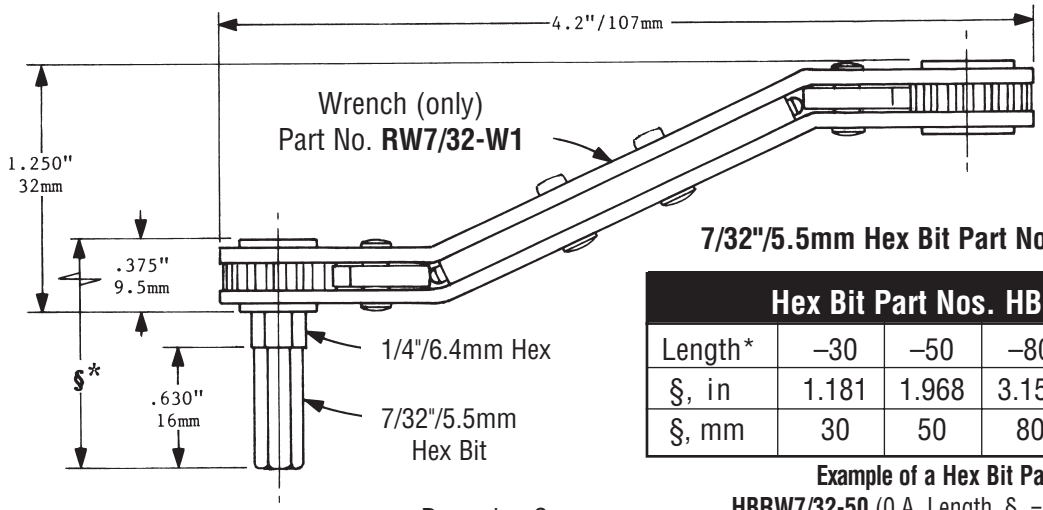

7/32"/5.5mm Hex Bit Part Nos. and Lengths

Hex Bit Part Nos. HBRW 7/32–					
Length*	–30	–50	–80	–150	–225
§, in	1.181	1.968	3.150	5.906	8.858
§, mm	30	50	80	150	225

Example of a Hex Bit Part No:
HBRW7/32-50 (0.A. Length, § = 1.968"/50mm)
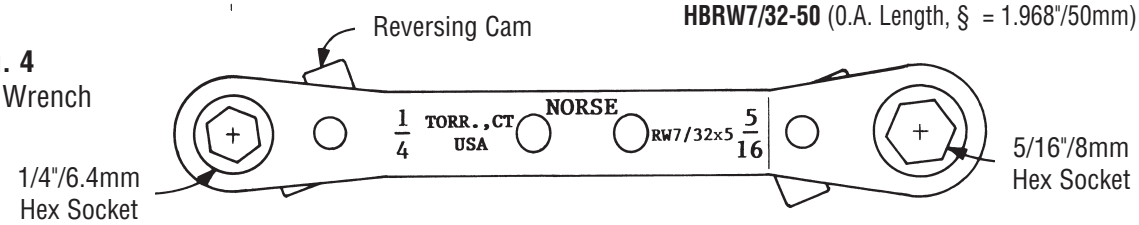
Fig. 4
Ratchet Wrench