TYPE 1R SMALL LATCH AND "U" RECEIVER

THIS LATCH/RECEIVER COMBINATION IS USED FOR JOINING COMPONENTS AT 90°

The Latch and Receiver are usually mounted on the surface. Both external and internal mountings are shown.
A Type 1R (Right Hand) Small Latch is shown: **S1125-1R-562.**
Type 1L (Left Hand) Small Latches **S1125-1L-562** are also available.
A 'U' Receiver **UR500-500** is used here for 90° joining.

Fig. 1 Type 1R door Latch with handle using 'U' Receiver for 90° closure; both are surface mounted. Handle can be on the opposite side. See TDS 17.

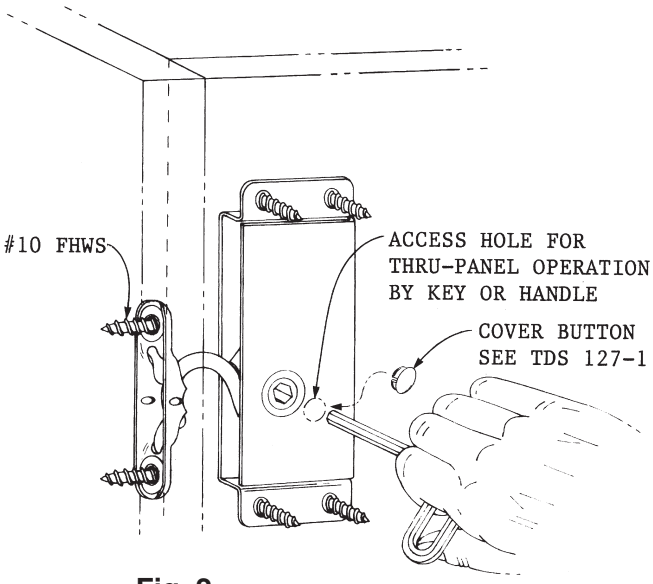

Fig. 2

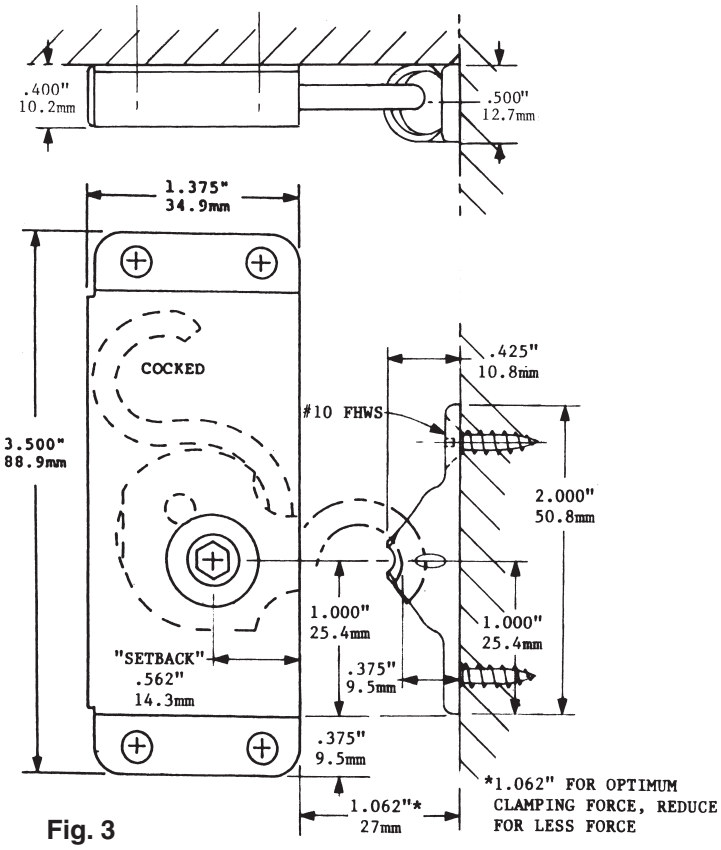

Fig. 3

Applications Frequently Require Internal Mounting and Thru-Panel Operation By Key or Handle

Clamping Force: 200#/90.7kg
Latch Case Material: Steel/Zinc Plate
Or: Steel/Brite Finish
Or: Stainless Steel
'U' Receiver Material: Stainless Steel

MOUNTING DIMENSIONS
Type 1R Small Latch: **S1125-1R-562**
'U' Receiver: **UR500-500**

 © 2009